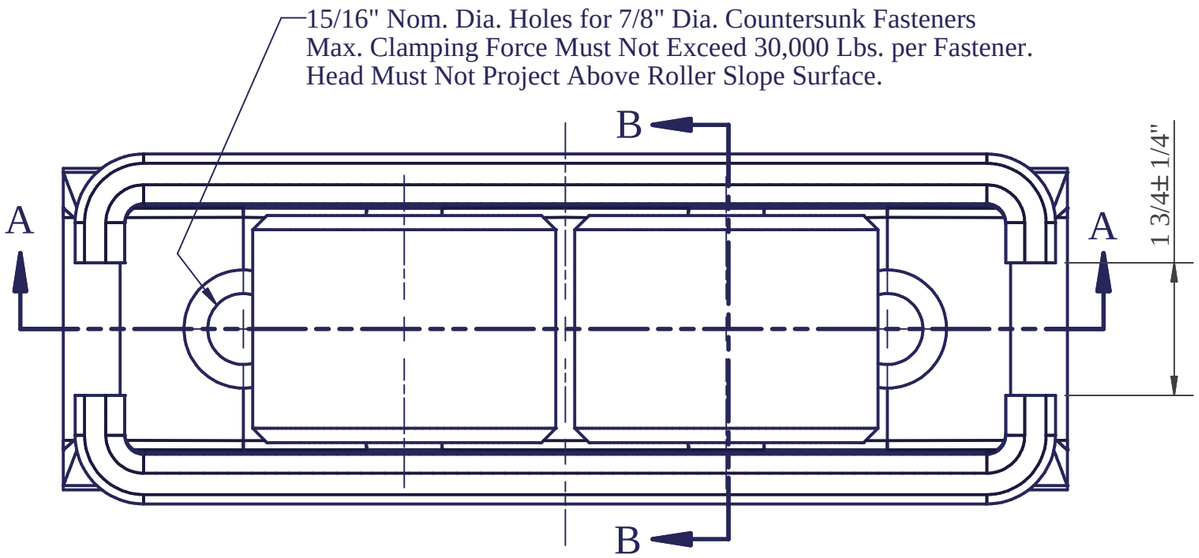


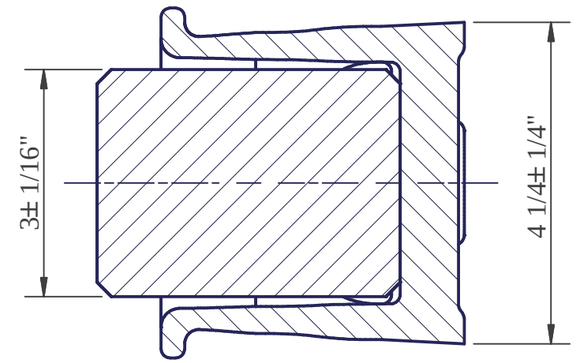


SECTION B-B

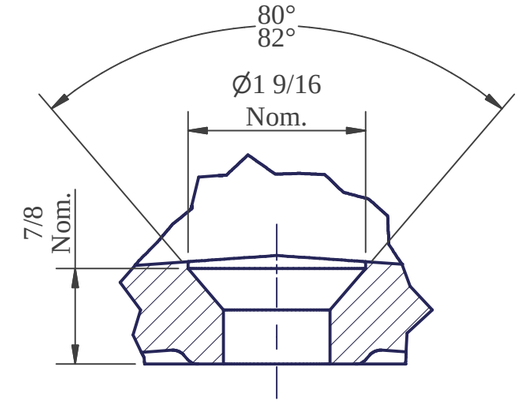


DETAIL C

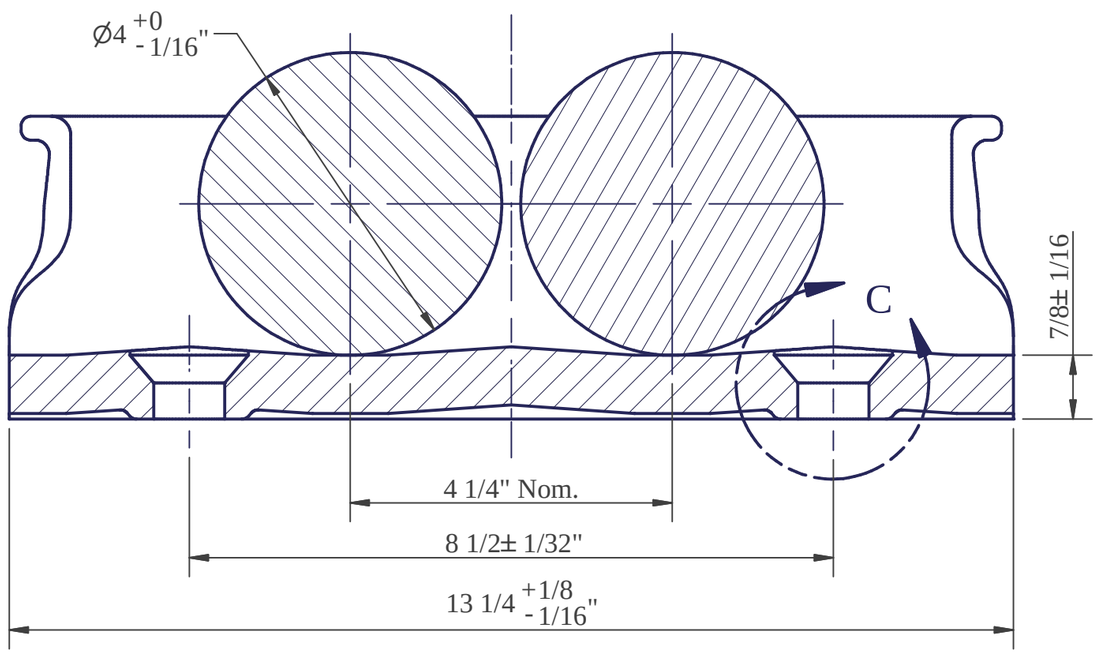


SECTION A-A

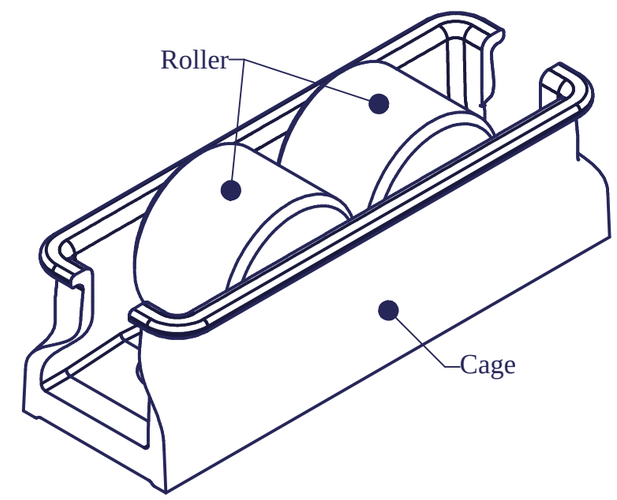


Notes:

1. Roller and cage made from high carbon rolled steel (mill variations allowed).
2. Cage bottom flatness meets A.A.R. Spec. S-3013, Fig. 29-B


A. Stucki Company
Division of Hansen Inc.
2600 Neville Road
Pittsburgh, PA 15225
412-771-7300
www.stucki.com


TITLE

688-B Side Bearing

| DRAWN | DATE | CONTROL | DRAWING NUMBER | REV |
|---|---|---|---|---|
| JJD | 8/1/02 REVISED | S | 07184 | 001 |